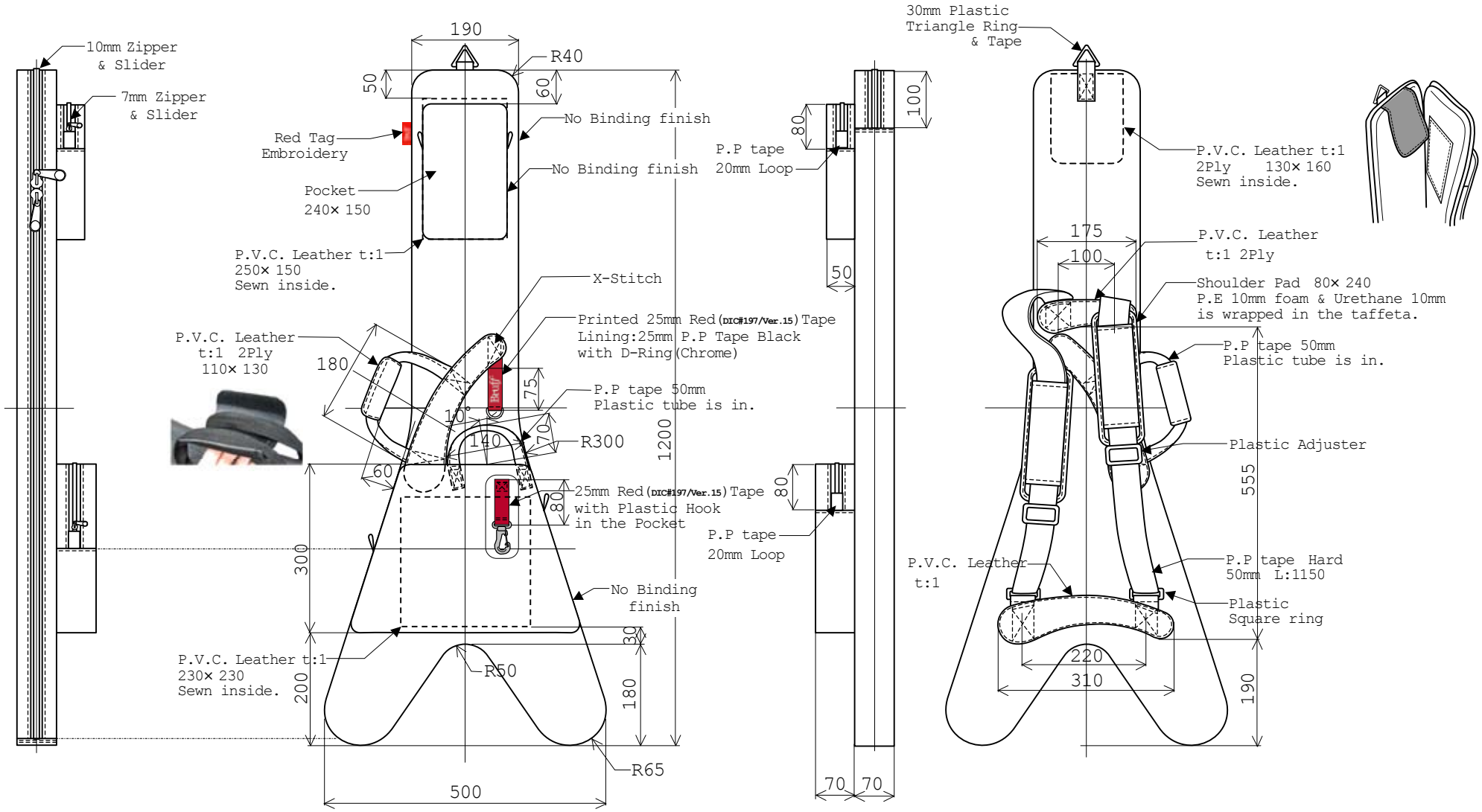
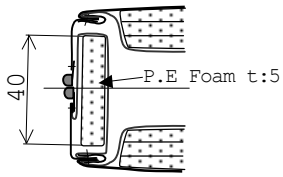
Cross section of side foam.